R.C.A. Victor Co., Inc.

	Model: 46X12	Chassis:	Year: Pre June 1940
	Power:	Circuit:	IF:
	Tubes:		
	Bands:		

Resources
Riders Volume 11 - RCA 11-85

Courtesy Nostalgia Air

Schematic, Voltage Socket, Trimmers Alignment

RCA MFG. CO., INC.

MODELS 46X11, 46X12
Chassis RC-456
46X13, Ch. RC456A

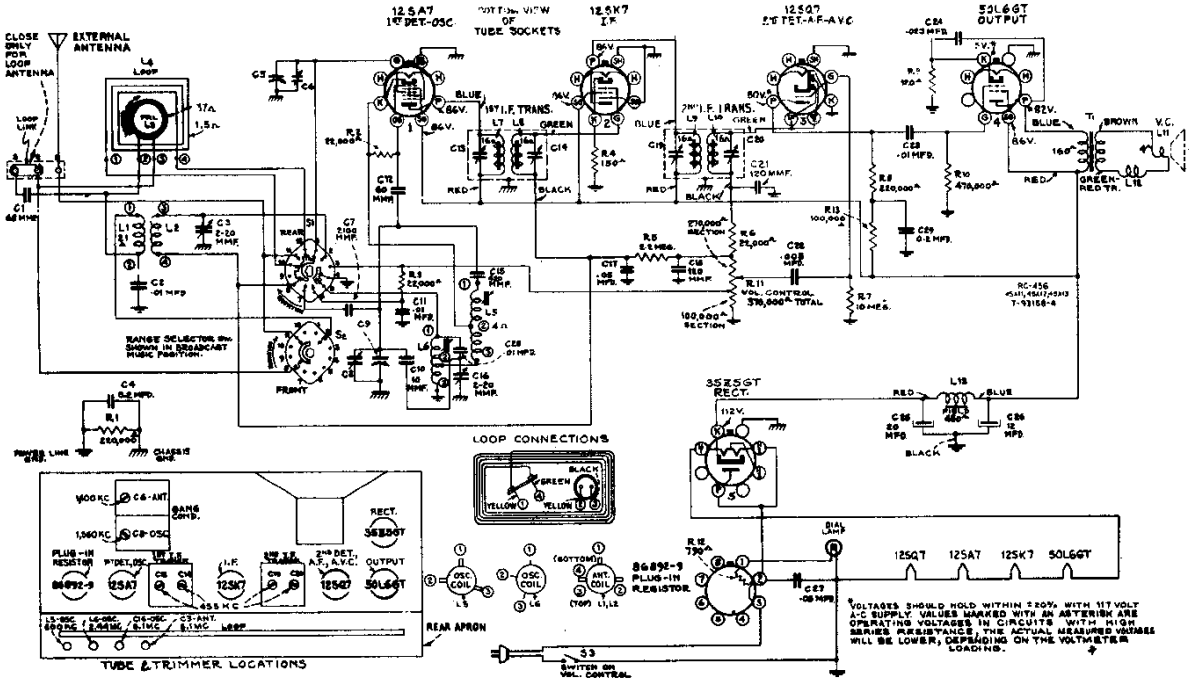

Steps	Connect the high side of test-oscillator to—	Tune test-osc. to—	Turn radio dial to—	Adjust the following for max. peak output—
1	12SK7 grid in series with .01 mfd.	455 kc	"Standard Broadcast" band quiet point with gang nearly open	L9 and L10 (2nd I-F Trans.)
2	12SA7 grid in series with .01 mfd.			L7 and L8 (1st I-F Trans.)
3	Ant. terminal 1 in series with 200 mmfd. Link closed	600 kc	600 kc "Standard Broadcast" band	L5 (osc.)
4		1,560 kc	Pointer at second from bottom mark at extreme right edge of dial plate* "Standard Broadcast" band	C8 (osc.)
5		1,400 kc	Resonance on 1,400 kc signal "Standard Broadcast" band	C6 (ant.)
6		600 kc	Resonance on 600 kc signal "Standard Broadcast" band	L5 (osc.) Rock gang
7	Repeat steps 4, 5, and 6			
8	Ant. terminal 1 in series with 200 mmfd. Link closed	6.1 mc	Pointer on dot at extreme right edge of dial* "Short Wave" band	C16 (osc.)** C3 (ant.) Rock gang
9		2.44 mc	Resonance on 2.44 mc signal "Short Wave" band	L6 (osc.) Rock gang
10	Repeat steps 8 and 9			

*These calibration marks are concealed when chassis is in cabinet.
**Use minimum capacity peak if two can be obtained. Check for selection of correct peak by tuning receiver to approximately 5.19 mc where a weaker signal should be received.

Pre-Setting Pointer.—With gang condenser in full mesh, the pointer should be adjusted to a horizontal position.

Antenna.—The set is equipped with a built-in loop antenna. If the loop antenna is used, the antenna terminal board link should be closed. This link should be open when an external antenna is used. Connect the external antenna to terminal 1. If an antenna longer than 100 feet (including lead-in) is used, connect a 100 to 200 mmf. capacitor in series with the lead-in.

Loudspeaker

Type ..... 5-inch electrodynamic
V.C. Impedance ..... 4 ohms at 400 cycles

Power Supply Ratings

A-C Rating ..... 105-125 volts, 50-60 cycles, 50 watts
D-C Rating ..... 105-125 volts, direct current, 50 watts

Power Output Rating

Undistorted ..... 1 watt
Maximum ..... 2 watts

32830	Capacitor—Mica trimmer comprising 2 sections of 2-20 mmfd. (C3, C16)	.40
13200	Capacitor—10 mmfd. (C10)	.35
12724	Capacitor—120 mmfd. (C18, C21)	.35
31870	Capacitor—415 mmfd. (C15)	.30
35099	Capacitor—2,100 mmfd. (C7)	.45
33584	Capacitor—.005 mfd. (C22)	.25
4937	Capacitor—.01 mfd. (C2, C11, C23, C28)	.25
4870	Capacitor—.025 mfd. (C24)	.20
32787	Capacitor—.05 mfd. (C17, C27)	.20
34505	Capacitor—0.2 mfd. (C4, C29)	.30
32576	Capacitor—Electrolytic, comprising 1 section of 20 mfd., and 1 section of 12 mfd. (C25, C26)	.90
31296	Coil—"A" band oscillator coil (L5)	1.05
35090	Coil—Antenna coil—"B" band (L1, L2)	.80
35096	Coil—Loop loading coil (L3)	.50
35251	Coil—Oscillator coil—"B" band (L6)	.70
35082	Condenser—Variable tuning condenser—less drum	2.10
35086	Control—Volume control and power switch	2.00
32634	Cord—Drive cord	.10
35093	Dial—Dial scale	.50
35083	Drum—Tuning condenser drive drum	.35
35091	Indicator—Station selector indicator	.25
31480	Lamp—Dial lamp	.20
35095	Loop—Antenna loop complete	2.50
35092	Plate—Dial plate—less dial scale	.30
35000	Resistor—Ballast tube resistor	.80
30936	Resistor—120 ohms, 1 watt (R9)	.22
13428	Resistor—150 ohms, ¼ watt (R4)	.20
13998	Resistor—22,000 ohms, ¼ watt (R2, R3, R6)	.20
14560	Resistor—100,000 ohms, ¼ watt (R13)	.20
12264	Resistor—220,000 ohms, ¼ watt (R1, R8)	.20
12285	Resistor—470,000 ohms, ¼ watt (R10)	.20
12679	Resistor—2.2 meg., ¼ watt (R5)	.20
13601	Resistor—10 meg., ¼ watt (R7)	.20

©John F. Rider, Publisher

Courtesy Nostalgia Air