Colonial Radio Corp.

	Model: 671	Chassis:	Year: Pre 1948
	Power:	Circuit:	IF:
	Tubes:		
	Bands:		

Resources
Riders Volume 15 - COLONIAL 15-8
Riders Volume 15 - COLONIAL 15-9
Riders Volume 15 - COLONIAL 15-10

MODELS 671,671A
Chrysler MoPar 601,602

COLONIAL RADIO CORP.

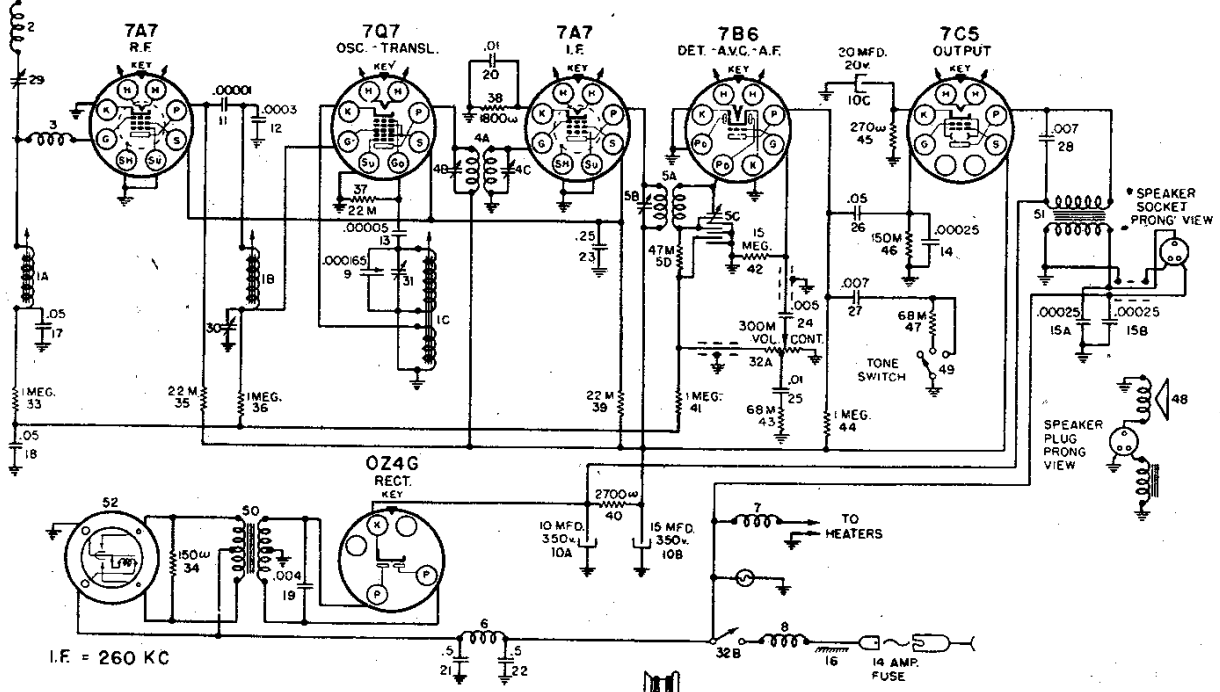

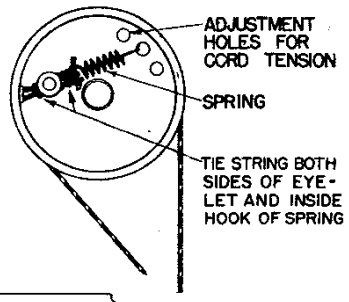

POSITION OF DRUM ASSEMBLY WITH COIL CORES FULLY IN.

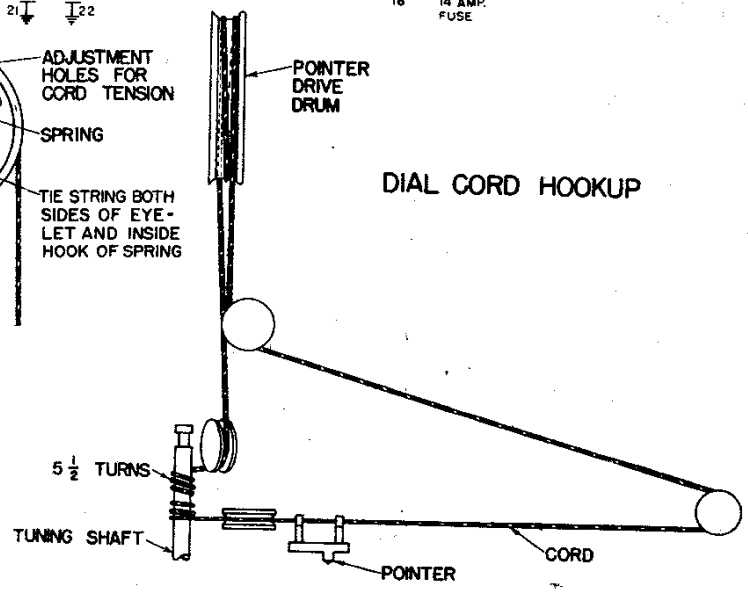

DIAL CORD HOOKUP

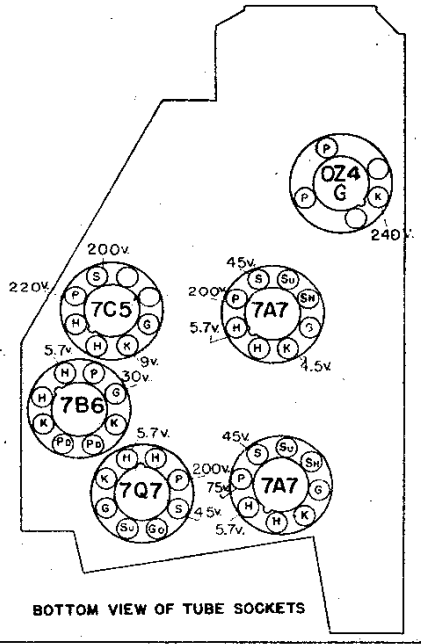

SOCKET VOLTAGES

Voltage readings taken from tube socket contacts to ground with a D. C. Voltmeter having a resistance of 1000 ohms per volt.

"A" Battery Voltage 6.0 Volts
"A" Battery Current 6.0 Amps.
"B" Voltage Supply 240 Volts
"B" Current 48 M.A. to 54 M.A.

COLONIAL RADIO CORP.

All capacity adjustments, with the exception of the antenna matching capacitor, are carefully made at the factory and should require no further adjustment. The iron cores in the permeability tuning unit are set at the time the receiver is originally calibrated, and are sealed to eliminate possibility of turning due to vibration. No adjustment of these cores should be necessary unless a core or coil must be replaced. If realignment is found to be necessary the circuits can be properly adjusted only with the use of a calibrated test oscillator or signal generator and an output meter using the procedure outlined below.

1. Alignment of I. F. at 260 KC.

   (a) Connect test oscillator lead through a .1 mfd. capacitor to the control grid of the 7Q7 oscillator tube (see parts layout - hot terminal of item 30).

   (b) Connect ground terminal of test oscillator to set chassis.

   (c) If a conventional output meter is used, connect across the speaker voice coil or secondary of the output transformer.

   (d) Turn volume control to maximum.

   (e) Set test oscillator at exactly 260 KC.

   (f) Adjust padders 4B and 4C on first I. F. transformer and 5B and 5C on second I. F. transformer for maximum output. These adjustments should be made several times, keeping the output of the test oscillator as low as is consistent with obtaining a readable indication on the output meter.

2. Alignment at 1610 KC.

   (a) Remove the signal lead of the test oscillator from the grid of the 7Q7 tube and connect to the antenna terminal of the receiver through a .00006 mfd. MICA CAPACITOR connected in place of the .1 mfd. capacitor previously used. (It is very important that a .00006 mfd. mica capacitor be used when aligning the antenna stage of these receivers in order that this circuit can be made to track properly).

   (b) Set the test oscillator to 1610 Kilocycles.

   (c) Turn station selector knob clockwise to the high frequency stop (1610 KC). Adjust the oscillator trimmer capacitor (see parts layout - item 31) for maximum output. (It is very important that this frequency be set accurately as a slight missetting will cause the receiver to be out of track over the high frequency end of the dial).

   (d) Set test oscillator to 1410 KC and tune receiver to this frequency. (Do <u>not</u> readjust oscillator trimmer).

   (e) Adjust the R. F. trimmer capacitor (see parts layout - item 30) for maximum output.

   (f) Adjust the antenna trimmer capacitor (see parts layout - item 29) for maximum output.

IMPORTANT NOTE

With the type of permeability tuning employed, the usual low frequency adjustments are not necessary.

When the entire alignment procedure has been accomplished accurately, the receiver should be uniformly sensitive over the entire frequency range.

CIRCUIT DESCRIPTION

Aspecial compensating capacitor in the oscillator circuit miimizes frequency drift due to normal variations in car voltage and temperature. The antenna, high gain radio and oscillator circuits are tuned by varying the inductance of the coils with special iron cores (permeability tuning). Frequency range 540 KC. to 1610 KC.
The circuit employed is of the conventional superheterodyne type with an intermediate frequency of 260 KC.
The triode section of the second detector is a driver resistance caupled tothe 7C5 audio output tube.

POWER SUPPLY

The power supply uses a gaseous rectifier tube, OZ4G, in conjunction with a primary four prong, plug in, full wave vibrator.

Schematic Location	Colonial Part No.	Part Name	Description
1	R45812	Coil Assembly	
1A			Antenna Coil & Core) Not to be
1B			R. F. Coil & Core) serviced
1C			Oscillator Coil & Core) individually
2	R46023A	Coil	Antenna Choke
3	R48820	Coil	Grid Filter Choke
4	R43775	Coil Assembly	1st I. F.
4A			I. F. Transformer
4B			Primary Trimmer
4C			Secondary Trimmer
5	R43776	Coil Assembly	2nd I. F.
5A			I. F. Transformer
5B			Primary Trimmer
5C			Secondary Trimmer & Filter
5D			68,000 Ohm Diode Filter
6	R9044E	Coil Assembly	Hash Choke
7	R5115E	Coil Assembly	Filament Choke
8	R5220CH	Coil	Spark Choke
9	R46462	Capacitor	.000165 Mfd. Compensating
10	R43691	Capacitor	Dry Electrolytic
10A			10 Mfd. - 350V
10B			15 Mfd. - 350V
10C			20 Mfd. - 20V
11	R41777	Capacitor	.00001 Mfd. Mica
12	R43685	Capacitor	.0003 Mfd. Mica
13	R14255	Capacitor	.00005 Mfd. Mica
14	R20548	Capacitor	.00025 Mfd. Mica
15	R43696	Capacitor	Dual
15A			.00025 Mfd. Mica
15B			.00025 Mfd. Mica
16	R43522A	Capacitor	Spark Plate
17	R42204	Capacitor	.05 Mfd. 200V - High Temperature
18	R42204	Capacitor	.05 Mfd. 200V - High Temperature
19	R42211	Capacitor	.004 Mfd. 1500V - High Temperature
20	R42877	Capacitor	.01 Mfd. 400V - High Temperature
21	R21019	Capacitor	.5 Mfd. 100V - High Temperature
22	R21019	Capacitor	.5 Mfd. 100V - High Temperature
23	R41377	Capacitor	.25 Mfd. 200V - High Temperature
24	R42227	Capacitor	.005 Mfd. 400V - High Temperature
25	R42206	Capacitor	.01 Mfd. 100V - High Temperature
26	R42204	Capacitor	.05 Mfd. 200V - High Temperature
27	R42445	Capacitor	.007 Mfd. 600V - High Temperature
28	R42445	Capacitor	.007 Mfd. 600V - High Temperature
29	R43695	Capacitor	Antenna Trimmer
30	R43694	Capacitor	R. F. Trimmer
31	R45850	Capacitor	Oscillator Trimmer
32	R44662	Control	Volume and On-Off
32A			Volume Control 300,000 Ohm
32B			On-Off Switch
33	XY31052	Resistor	1 Megohm 1/3 Watt
34	ZY31512	Resistor	150 Ohm 1 Watt
35	WY32231	Resistor	22,000 Ohm 1/2 Watt
36	XY31052	Resistor	1 Megohm 1/3 Watt
37	XY32232	Resistor	22,000 Ohm 1/3 Watt
38	XY31821	Resistor	1800 Ohm 1/3 Watt
39	ZY32231	Resistor	22,000 Ohm 1 Watt
40	ZY32721	Resistor	2700 Ohm 1 Watt
41	XY31052	Resistor	1 Megohm 1/3 Watt
42	XY31562	Resistor	15 Megohm 1/3 Watt
43	XY36831	Resistor	68,000 Ohm 1/3 Watt
44	XY31052	Resistor	1 Megohm 1/3 Watt
45	ZY32711	Resistor	270 Ohm 1 Watt
46	XY31541	Resistor	150,000 Ohm 1/3 Watt
47	XY36831	Resistor	68,000 Ohm 1/3 Watt
48	R45914	Speaker	7" Dynamic Complete
49	R45764A	Switch	Tone
50	R43787	Transformer	Power
51	R43692	Transformer	Output
52	R43697	Vibrator	

PARTS LAYOUT

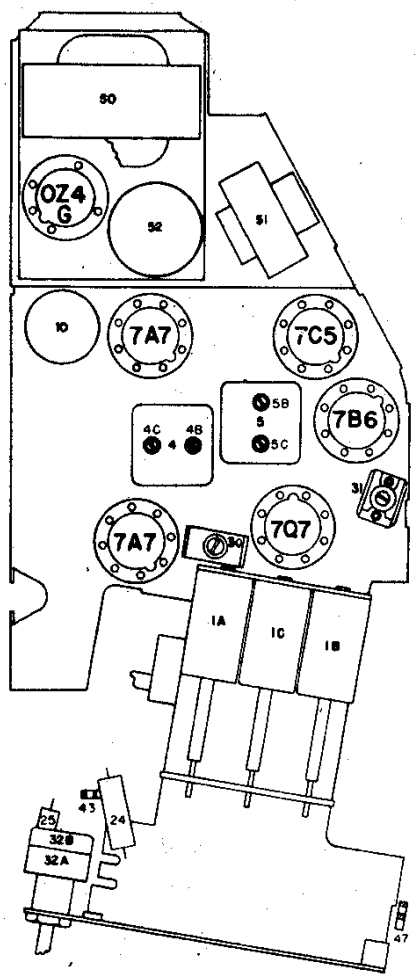

PARTS LAYOUT