Tradio

Model: T-U6-1	Chassis:	Year: Pre 1949
Power:	Circuit:	IF:
Tubes:		
Bands:		

Resources
Riders Volume 17 - TRADIO 17-6
Riders Volume 17 - TRADIO 17-7
Riders Volume 17 - TRADIO 17-8
Riders Volume 17 - TRADIO 17-9
Riders Volume 17 - TRADIO 17-10

Courtesy Nostalgia Air

MODEL T-U6-1

TRADIO

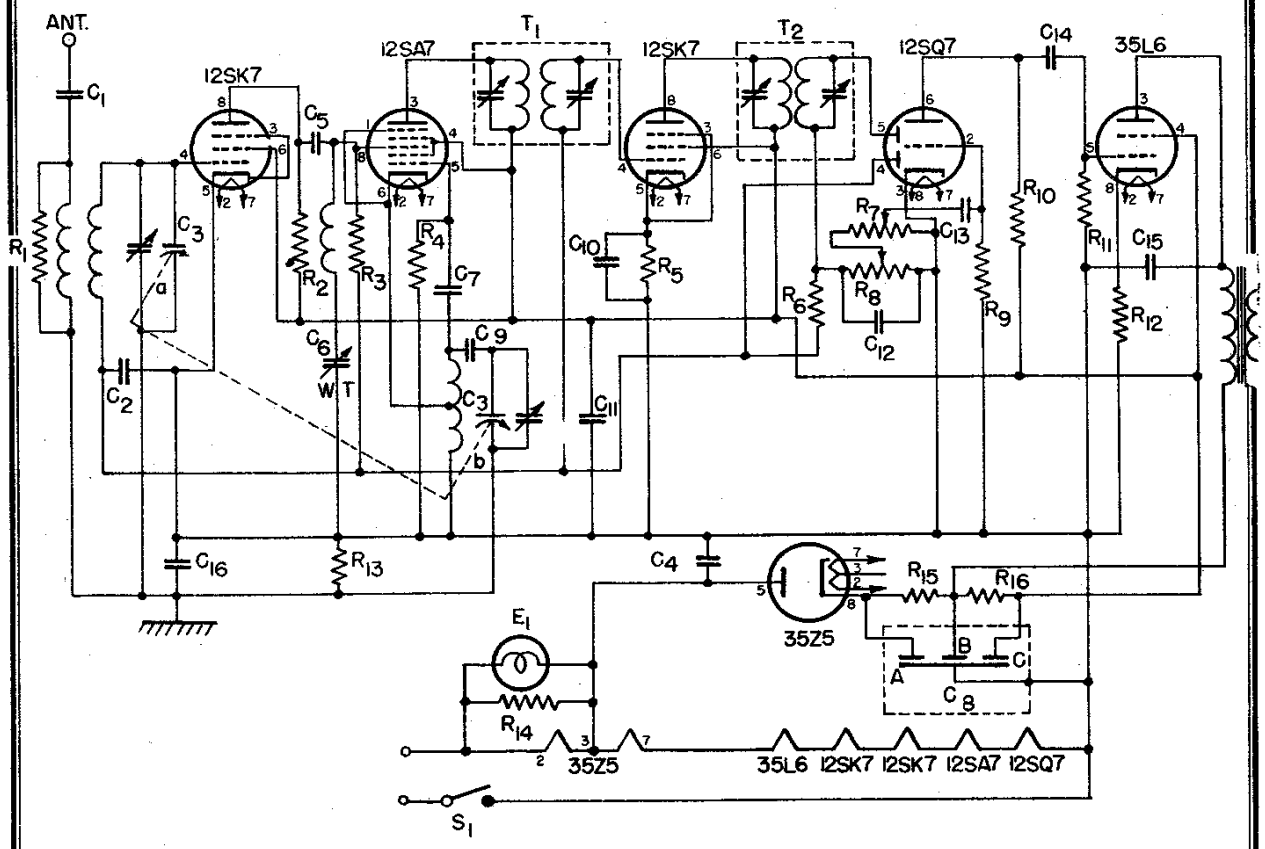

R-1	RESISTOR	15,000	OHMS
R-2		6,800	
R-3		100,000	
R-4		22,000	
R-5		100	
R-6		1 MEG.	
R-7		VAR.-.5 MEG.	
R-8		VAR.-.5 MEG.	
R-9		3.9MEG.	
R-10		220,000	
R-11		470,000	
R-12		130	
R-13		220,000	
R-14		30	
R-15		200	
R-16	RESISTOR	910	OHMS

C-1	CONDENSER	250	MMF.
C-2		.05	MF.
C-3		VAR. AIR, 360 MMF.	
C-4		.05	MF.
C-5		100	MMF.
C-6		VAR.	
C-7		100	MMF
C-8		A 30 MF B 40 MF C 20 MF	
C-9		.01	MF
C-10		.05	MF
C-11		.05	MF
C-12		250	MMF
C-13		.005	MF
C-14		.01	MF
C-15		.03	MF
C-16	CONDENSER	.1	MF

E-1	LAMP-47	
LS-1	SPEAKER	P. M.
T-1	I.F. TRANSFORMER (INPUT) 455 K.C.	
T-2	I.F. TRANSFORMER (OUTPUT) 455 K.C.	
S-1	SWITCH (ON VOL. CONT.)	

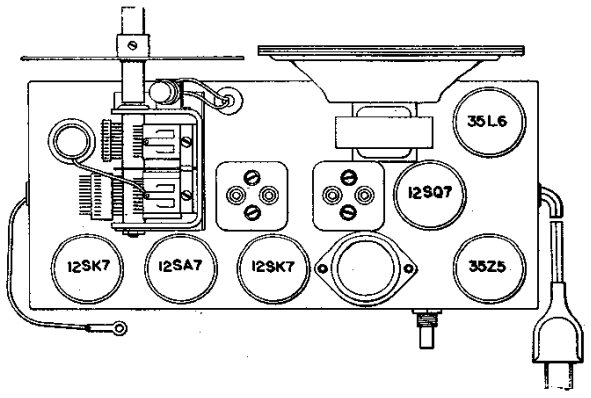

©John F. Rider

Courtesy Nostalgia Air

TRADIO

MODEL T-U6-1

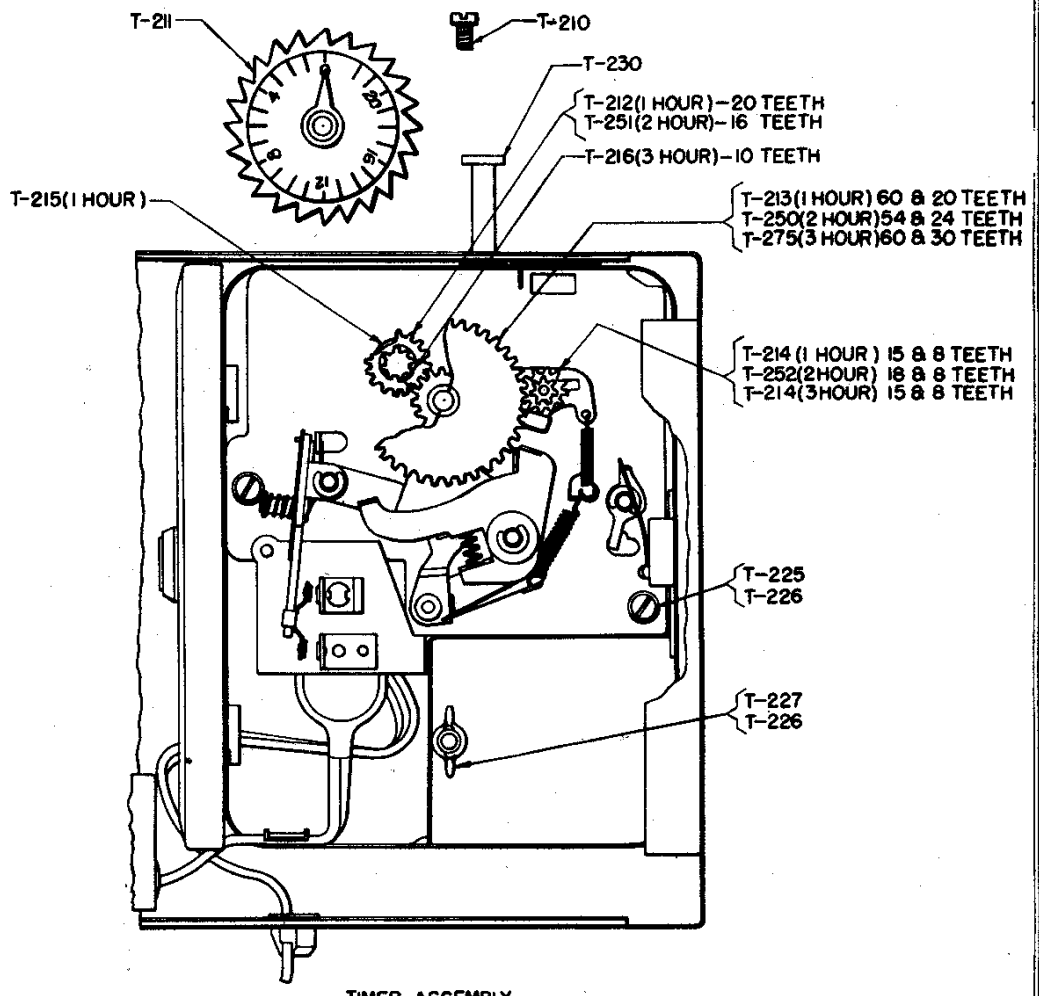

TIMER ASSEMBLY
(T-210 & T-211 REMOVED TO SHOW 1 HOUR GEAR SETUP)

FROM 1 TO 2 HOUR ASSEMBLY

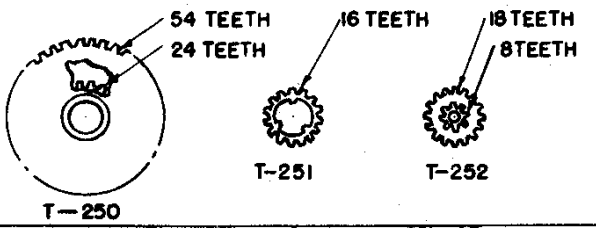

REMOVE	REPLACE
T-210	T-251(COLLAR DOWN)
T-211	T-252(8 TOOTH GEAR UP)
T-213	T-250(LARGE GEAR UP)
T-212	T-211
T-214	T-210
T-215	

FROM 1 TO 3 HOUR ASSEMBLY

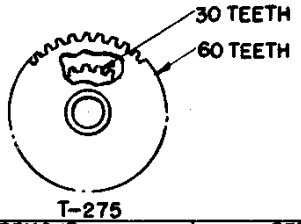

REMOVE	REPLACE
T-210	T-275 LARGE GEAR UP
T-211	T-211
T-213	T-210
T-212	
T-215	

©John F. Rider

Courtesy Nostalgia Air

1. The meter contacts R&S may not close properly.
2. Coins may be jammed in the coin chute.
   (A) The easiest way to "free" jammed coins is to open the meter and pry them out of the chute with the blade of a screwdriver or the point of an ice pick. Use caution in prying the coins free so that the chute is not deformed in the prying operation.
3. The dial group parts T-211 may not be functioning properly
   (A) If the various parts of the dial group are not operating smoothly, the meter switch may open, even though the account may be prepaid one or more periods. The remedy for this condition is to replace the dial group, which can be done easily in the field. The defective dial should be returned to the factory for repairs.
4. The Meter Switch Contacts May Be Badly Burned
   (A) If the switch contacts R&S cannot be dressed well enough to insure proper closing the parts should be replaced.
5. The Line Fuses May Be Blown.
6. The Line Switch May Be Open.
   (A) Someone unknown to the party registering the service call may have opened the line switch. Be sure to check to see that the switch is closed.
7. The Timing Gears May Be Jammed.
   (A) See Fig-4 on Timing Gears
8. The Meter May Be Collecting Too Much Money.
   (A) The Meter May Have Incorrect Timing Gears. (See Fig. 4)
   (B) The cycles of the line may be greater than those of the meter motor. For example, if a 25 cycle meter is connected to a 60 cycle line, the meter will run 2.4 times as fast as a 60 cycle meter. Therefore, the payments will be cancelled out too rapidly. The cycles of the meter are shown on the name plate.

HOW TO REMOVE THE TIMING UNIT FROM THE CASE

1. Remove coin partition T-228 from the timing unit case.
2. Remove the screws T-225 (2).
3. Remove Screw T-231 and collar T-230. (Fig. 1).
4. Remove the line clamp T-107 and unplug the cord from the timing unit.
5. Remove the timing unit from the case.
6. Remove the screws connecting the electrical outlet line to the timing unit.
7. The timing unit may be replaced in the case by reversing the above steps.

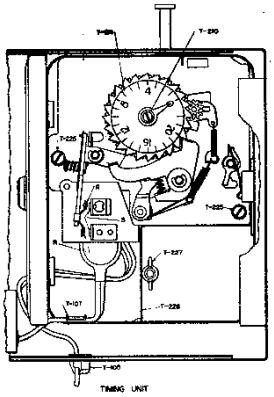

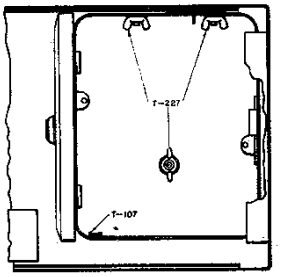

FOR REMOVING THE TIMING UNIT CASE FROM THE CABINET REMOVE T-227 (3). NOTE—THIS WING NUT MUST BE IN A VERTICAL POSITION AFTER TIGHTENING SO THAT COIN PARTITION T-228 MAY BE INSERTED.

TIMING CASE MOUNTING & CABINET

©John F. Rider

Courtesy Nostalgia Air

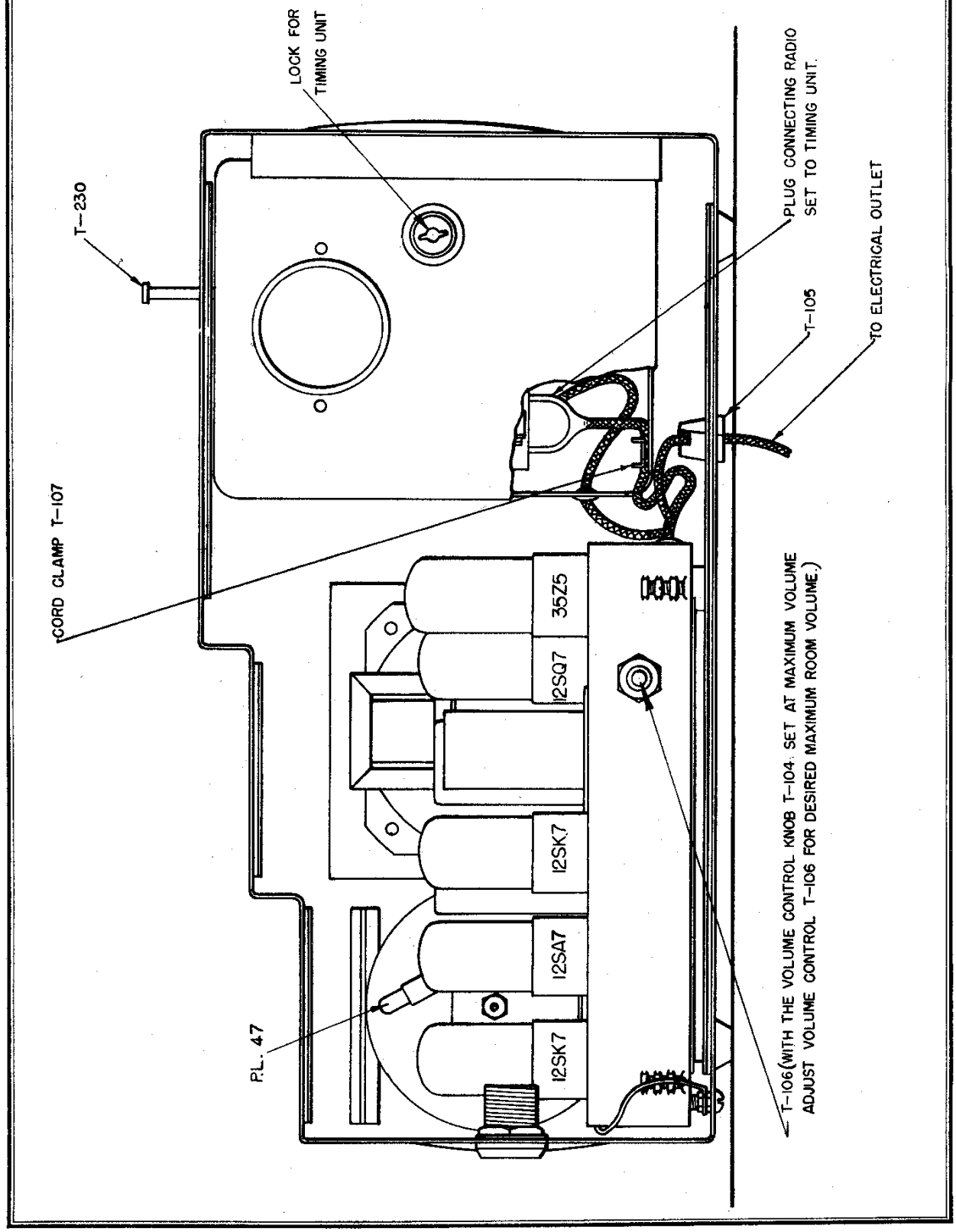

©John F. Rider

Courtesy Nostalgia Air

MODEL T-U6-1

TRADIO

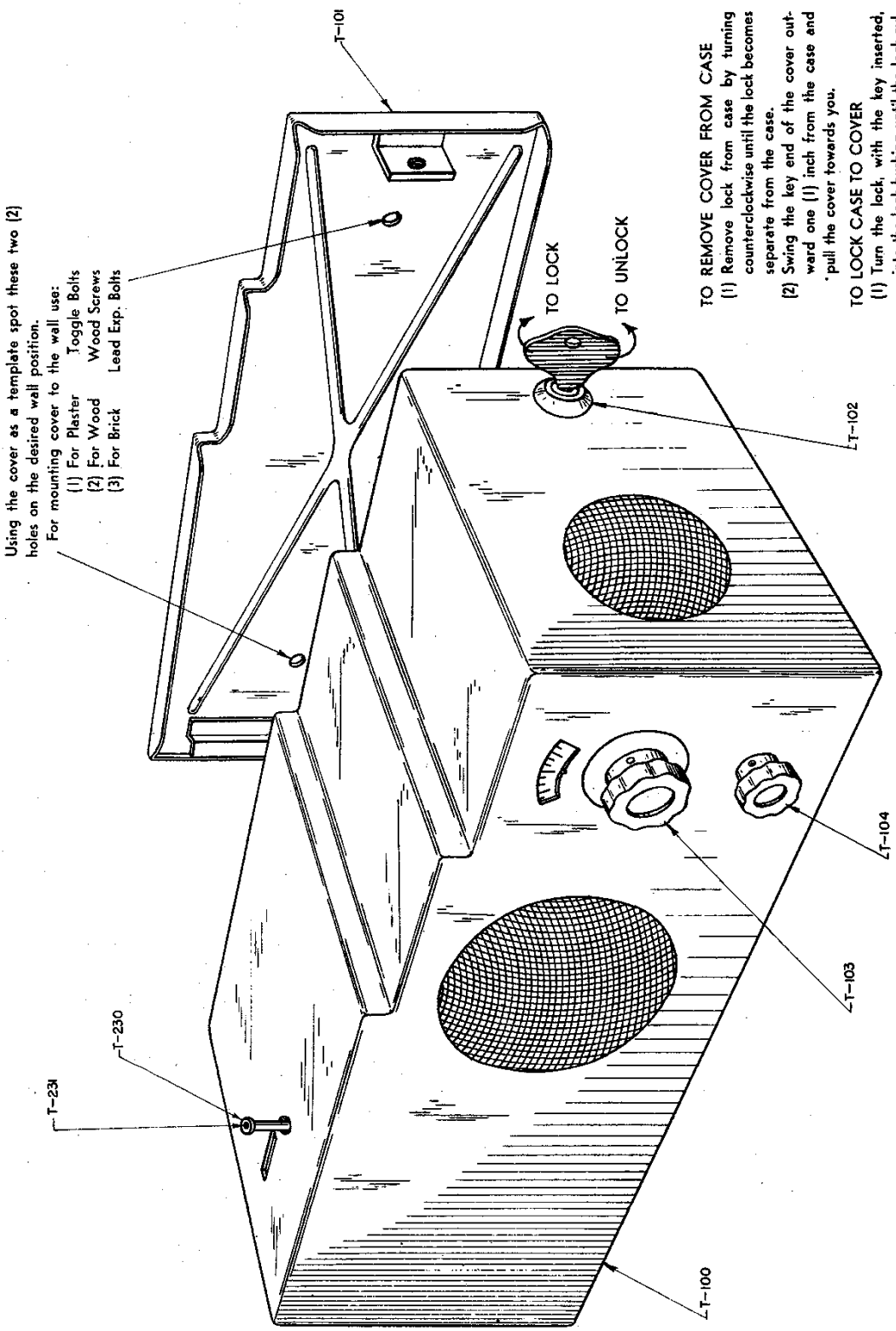

Using the cover as a template spot these two (2) holes on the desired wall position.

For mounting cover to the wall use:

(1) For Plaster	Toggle Bolts
(2) For Wood	Wood Screws
(3) For Brick	Lead Exp. Bolts

TO REMOVE COVER FROM CASE

(1) Remove lock from case by turning counterclockwise until the lock becomes separate from the case.

(2) Swing the key end of the cover outward one (1) inch from the case and pull the cover towards you.

TO LOCK CASE TO COVER

(1) Turn the lock, with the key inserted, into the lock bushing until the lock cylinder is flush with the bushing face and the key is in a vertical position.

(2) Remove the key while it is in a vertical position.

CAUTION:

After lock cylinder with key still inserted is separated from the lock bushing do not remove key from cylinder.

©John F. Rider

Courtesy Nostalgia Air