Philco Radio & Television Corp.

	Model: 604	**Chassis:**	**Year:** Pre October 1936
	Power:	**Circuit:**	**IF:**
	Tubes:		
	Bands:		

Resources
Riders 7 (VII) PHILCO 7-84
Riders 7 (VII) PHILCO 7-85
Riders 7 (VII) PHILCO 7-86

Copyright © 1989-2025 Nostalgia Air

MODEL 604
Voltage, Socket
Chassis, Parts

PHILCO RADIO & TELEV. CORP.

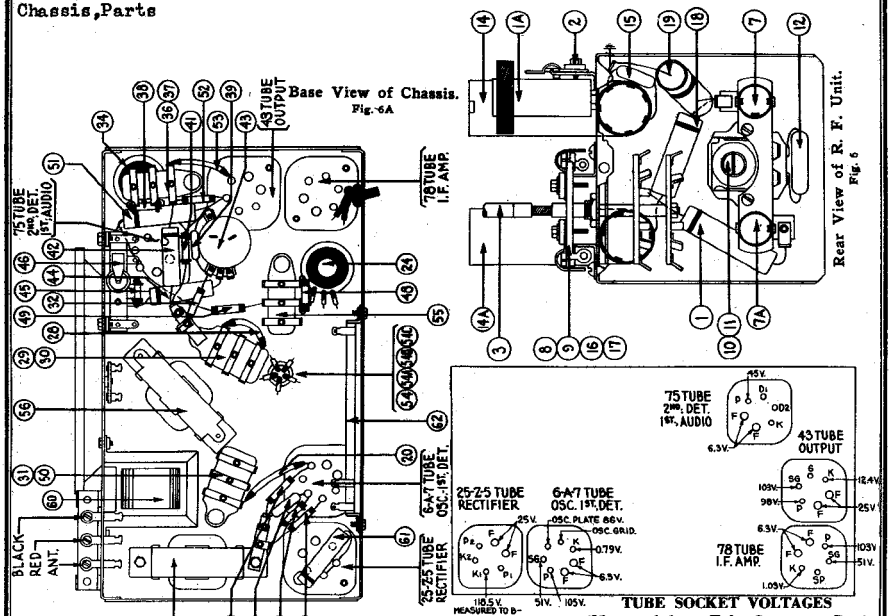

FIG. 3. Tubes as Viewed from Bottom

Schematic Number	Part and Description	Part No.	List Price
①	Condenser (.001 Mfd. Tubular)	30-4201	$0.20
②a	Wave Trap Coil	32-2093	.50
②	Wave Trap Compensator (460 K.C.)	31-6084	.15
③	Wave Band Switch Assy	38-7631	1.50
④	Pilot Lamp (S.W. 6.3 V.)	34-2068	.16
⑤	Pilot Lamp (Bdcst. 6.3 V.)	34-2068	.16
⑥	Tuning Condenser	31-1796	3.25
⑦	Oscillator Transformer (Bdcst.)	32-2047	.45
⑦a	Oscillator Transformer (S.W.)	32-2048	.45
⑧	Compensator (Osc. 1600 K.C.)	31-6085	.60
⑧	Compensator (Osc. 18.0 M.C.)	Part of ⑧	
⑨	Compensator (Osc. series, screw, 580 K.C.)	31-6027	.70
⑨	Compensator (Osc. series, nut, 6.0 M.C.)	Part of ⑨	
⑩	Condenser (.00325 Mfd. Mica)	30-1061	.45
⑪	Resistor (13,000 ohms, ¼ watt)	33-313133	.20
⑫	Antenna Transformer (Bdcst.)	32-2045	1.10
⑫a	Antenna Transformer (S.W.)	32-2046	.55
⑬	Condenser (15 Mmfd., Mica)	30-1030	.20
⑭	Compensator (Ant., 1400 K.C.)	Part of ⑭	
⑭	Compensator (Ant., 18.0 M.C.)	Part of ⑭	
⑮	Condenser (.05 Mfd., Tubular)	30-4020	.20
⑯	Condenser (.15 Mfd., Tubular)	30-4191	.25
⑰	Resistor (200 ohms, wire wound)	7217	.20
⑱	Resistor (12,000 ohms, ½ watt)	33-412334	.20
⑲	Condenser (250 Mmfd., Mica)	30-1032	.25
⑳	Compensator (1st I.F. Pri. 460 K.C.)	Part of ⑳	
⑳	1st I.F. Transformer	32-2049	1.50
⑳	Compensator (1st I.F. Sec. 460 K.C.)	Part of ⑳	
㉑ ㉒ ㉓	Eliminated By Production Changes		
㉔	Resistor (300 ohms, wire wound)	33-3010	.20
㉕	Condenser (.1 Mfd. Twin Bakelite)	4989-ODU	.40
㉕	Condenser (.1 Mfd. Twin Bakelite)	Part of ㉕	
㉕	Condenser (.1 Mfd. Twin Bakelite)	4989-ODU	.40
㉖	Resistor (2.0 Meg., ¼ watt)	33-520143	.20
㉗	Compensator (2nd I.F. Pri., 460 K.C.)	Part of ㉗	
㉗	2nd I.F. Transformer	32-2059	3.00
㉗	Compensator (2nd I.F. Sec. 460 K.C.)	Part of ㉗	
㉘	Condenser (110 Mmfd., Twin Bakelite)	8045-ODU	.25
㉘	Condenser (110 Mmfd.)	Part of ㉘	
㉙	Resistor (51,000 ohms, ¼ watt)	33-351143	.20
㉚	Condenser (600 Mmfd., Mica)	30-1049	.25
㉛	Resistor (25,000 ohms, ½ watt)	33-325344	.20
㉛	Resistor (32,000 ohms, ½ watt)	33-332334	.20
㉜	Condenser (.01 Mfd. Tubular)	30-4124	.25
㉝	Volume Control Assy. (500,000 ohms)	38-7630	1.45
㉞	Condenser (.01 Mfd. Tubular)	30-4124	.25

Schematic Number	Part and Description	Part No.	List Price
㊱	Resistor (1.0 Meg., ¼ watt)	33-510143	$0.20
㊲	Bias Cell (1.0 volt)	41-8009	.20
㊳	Eliminated By Production Changes		
㊴	Resistor (70,000 ohms, ¼ watt)	33-370133	.20
㊵	Resistor (240,000 ohms, ½ watt)	33-424344	.20
㊶	Condenser (0.1 Mfd.)	Part of ㊶	
㊷	Condenser (.01 Mfd. Tuoular)	30-4169	.20
㊸	Resistor (490,000 ohms, ½ watt)	33-449344	.20
㊹	Resistor (400 ohms, wire wound)	33-3122	.25
㊺	Elec. Condensers (10.0 Mfd., 8.0 Mfd., 16.0 Mfd., 16 Mfd.)	30-2154	3.25
㊻	Condenser (.01 Mfd. Bakelite)	3903-OSU	.25
㊼	Output Transformer	32-7568	.95
㊽	Cone Assy.	36-3029	.60
㊾	Field Coil Assy	36-3620	2.75
㊿	Filter Choke	32-7569	1.30
(51)	Filter Choke	32-7572	1.00
(52)	Condenser (.05 Mfd. Tubular)	30-4020	.20
(53)	B. C. Resistor (15—133 ohms)	33-3235	.35
	R. F. Coil Housing	29-3755	.15
	R. F. Coil Housing, Side	29-3770	.10
	R. F. Coil Housing, Back	29-3814	.05
	Bias Cell Panel Assy	38-7846	.15
	B. C. Resistor Mtg. Screw	W-650-A	.40C
	B. C. Resistor Mtg. Nut	W-95-A	.30C
	Tube Shield Body	28-2726	.10
	Tube Shield Base	28-2725	.03
	Socket (6-prong)	27-6036	.11
	Socket (7-prong)	27-6037	.11
	Volume Control Mtg. Nut	W-684-A	1.25C
	Volume Control Shaft	Part of ㊶	
	Wave Switch Shaft	Part of ③	
	Dial Assembly	31-1799	
	Shaft Centering Plate	29-3805	.10
	Pilot Lamp Bracket Assy	38-7616	.80
	Chassis Mtg. Screw	W-1587-A	.75C
	Chassis Mtg. Nut	W-124-A	.35C
	Chassis Mtg. Washer	W-151	.20C
	Chassis Mtg. Washer	W-1335	.80C
	Chassis Mtg. Washer	W-291	40C
	Knob (Tuning)	27-4206	.12
	Knob (Slow Speed Tuning)	27-4207	.10
	Knob (Wave Band Switch, Vol. Control)	27-4208	.10
	Shield Plate Assy	29-3769	.40
	Shield Plate Ins.	27-8214	1.15
	Baffle Assy	40-5918	

PRICES SUBJECT TO CHANGE WITHOUT NOTICE

©John F. Rider, Publisher

Copyright © 1989-2025 Nostalgia Air

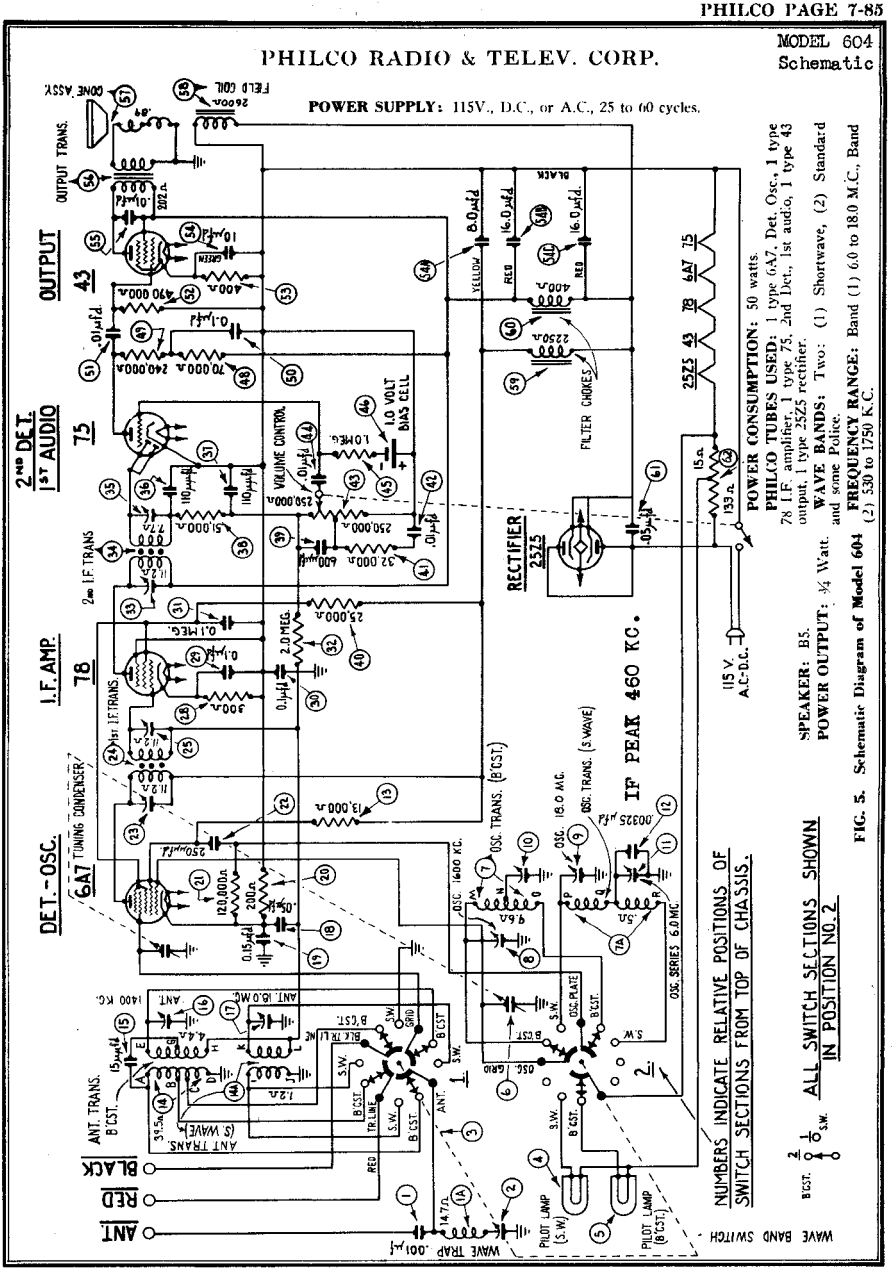

FIG. 5. Schematic Diagram of Model 604

©John F. Rider, Publisher

Copyright © 1989-2025 Nostalgia Air

MODEL 604
Trimmers
Coils
Alignment

PHILCO RADIO & TELEV. CORP.

Adjusting Compensating Condensers

Adjustment of compensating condensers in Model 604 requires an accurate signal generator covering I.F., and standard-wave frequencies. The **PHILCO Model 088 All-Wave Signal Generator,** having a continuous range of from 100 to 20,000 K.C., is ideal for this purpose.

An output meter is also needed. **PHILCO Model 025 Circuit Tester** includes a high grade output meter.

Philco No. 3164 fibre wrench and No. 27-7059 fibre-handled screwdriver complete the equipment needed for making these adjustments. The locations of the various compensating condensers are shown in Fig. 4. Connect the output meter to the plate and cathode contacts of the type 43 power tube (using the adapters provided with the "025") and set it at the 0-30 volt range.

INTERMEDIATE FREQUENCY: Turn the condenser gang all the way in (maximum capacity) and set the volume control of Receiver at maximum (clockwise). Connect the 088 signal generator antenna lead to the grid of the 78 I.F. tube through a .00025 mf. condenser and the ground lead to the chassis of the receiver. Set the 088 signal generator attenuator for approximately ¼ scale reading on output meter. Adjust condensers ㉕ and ㉓ for maximum output meter reading.

Remove the 088 signal generator antenna lead from the grid of the 78 and connect it to the grid of the 6A7, adjust condensers ㉝ and ㉟ for maximum output meter reading.

WAVE TRAP: Connect the 088 signal generator antenna lead to the aerial post of receiver. Adjust condenser ② for *minimum* output meter reading.

SHORT WAVE: In adjusting the short wave or high frequency band, the det. compensator will have a tendency to "pull" or **change** the frequency of the oscillator. By shunting a padding or variable condenser (about .00025 Mf.) across the oscillator section of the gang (bottom section) and tuning it so that the second harmonic, instead of the fundamental, beats with the incoming signal, this "pull" can be minimized. The procedure for tuning this band is as follows:

Set the dial of the receiver at 18 megacycles (top scale) and the 088 dial at the same frequency. Turn wave band switch to position 1 (extreme right). Connect the shunt condenser to the oscillator section of the gang and tune it so that the second harmonic of the oscillator beats with the 18 M.C. signal from the 088. Next tune condenser ⑰ (antenna) for maximum reading of the output meter. Disconnect shunt condenser and tune condenser ⑧ (osc.) for correct dial calibration. The receiver, oscillator frequency, when correctly adjusted, will be higher than that of the incoming signal. In order to check this it should be possible to pick up the 18 M.C. 088 oscillator signal as an image signal by increasing the 088 output and tuning the receiver to approximately 17.1 M.C.

For the low frequency adjustment of this band, turn the dial to 6.0 M.C., set the signal generator at 6.0 M.C. and adjust condenser ⑪ (nut) for maximum output meter reading. Readjust condenser ⑨ at 18.0 M.C.

STANDARD AND POLICE: Turn wave band switch to position 2 (extreme left), set signal generator at 800 K.C. and dial of receiver at 1600 K.C. (using second harmonic of Signal Generator). Now adjust the oscillator and antenna "standard" condensers. These are ⑧ and ⑯ respectively. Turn dial of receiver and Signal Generator to 1400 K.C., and readjust condenser ⑯.

Turn the dial of receiver to 58, set signal generator at 580 K.C. and adjust condenser ⑩, (oscillator standard series), (screw) for maximum output meter reading.

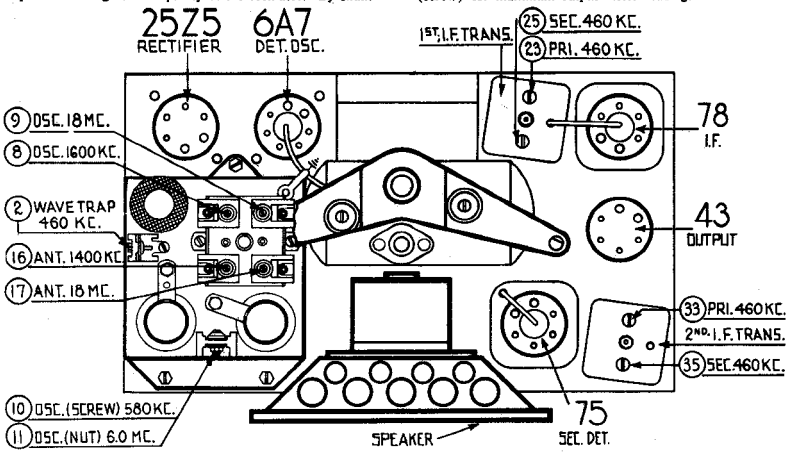

FIG. 4. Location of Compensating Condensers

The letters appearing on the terminals of the transformers below, correspond to those shown on the schematic diagram, Fig. 5.

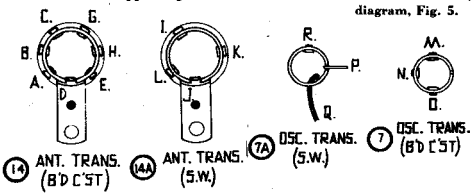

FIG. 1. R.F. Transformers

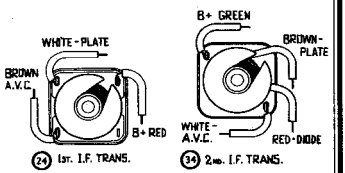

FIG. 2. I.F. Transformers

©John F. Rider, Publisher
Copyright © 1989-2025 Nostalgia Air