Spiegel Inc.

	Model: P Compact	Chassis:	Year: Pre 1948
	Power:	Circuit:	IF:
	Tubes:		
	Bands:		

Resources

Riders Volume 15 - SPIEGEL 15-1

Courtesy Nostalgia Air

SPIEGEL

MODEL F Compact
MODEL P Compact
Battery Eliminators

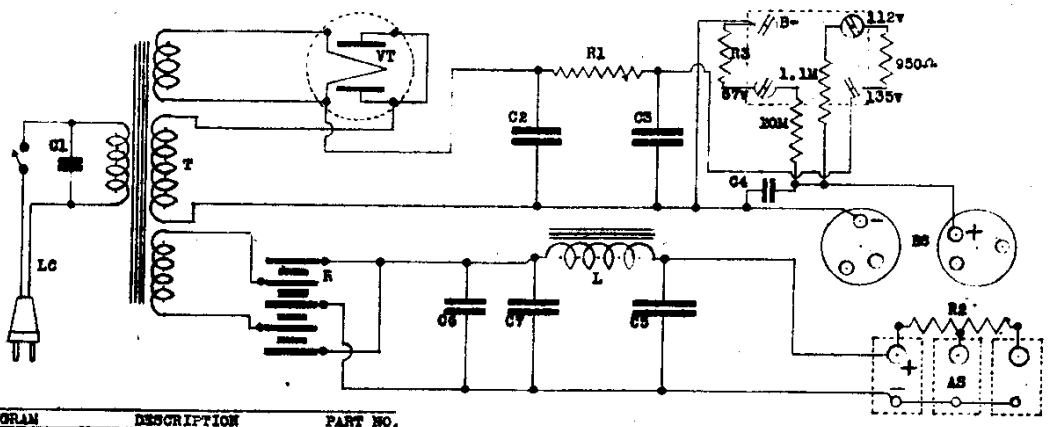

DIAGRAM	DESCRIPTION	PART NO.
LC	Line cord and switch	1601
C1	Condenser .05 mfd 400v	1602
C2,C3,C4	Condenser 20-10-10- 150v	1603
C5	Condenser 1000 mfd 2v	1605
C6	Condenser .25 mfd 130v	1612
C7	Condenser 1000 mfd 3v	1604
R1	Resistor 1600 ohms 1w	1606
R2	Resistor 1.5 ohms tapped	1618
R3	Resistor, voltage divider	1613
S	Rectifier	1608
T	Transformer	1609
VT	Tube 5Y3 GT	1610
L	Filter choke	1611
A8	"A" socket	1614
BH	Battery plug harness	1315
B8	"B" socket	1616
S	Tube socket	1617

MODEL "F" COMPACT

Operates any 2 Volt—4, 5, 6 or 7 tube battery radio from 115 v. 60 cy. source.

For use in receivers employing 1A4, 1C7, 1D5, 1E5 1F5, 1F7, 1H4G, etc., tubes to change radio into an all-electric set giving maximum performance at all times. Inexpensive to operate. Excellent to use when AC current is available and save batteries for occasions when used as portable.

Primary
115 Volts A.C. @ 60 cycles.

Specifications
6 foot cord and plug—switch in cord.
Size: 2⅜" x 4½" x 8¼".
Weight packed—5½ pounds.

TECHNICAL DATA

"A" Supply Output
7 tubes . . . . . 2V. @ 480ma.
6 tubes . . . . . 2V. @ 420ma.
4-5 tubes (average) . . . . . 2V. @ 325ma.

"B" Supply Output
67, 90, 112, 135 Volts D.C. @ 18ma.

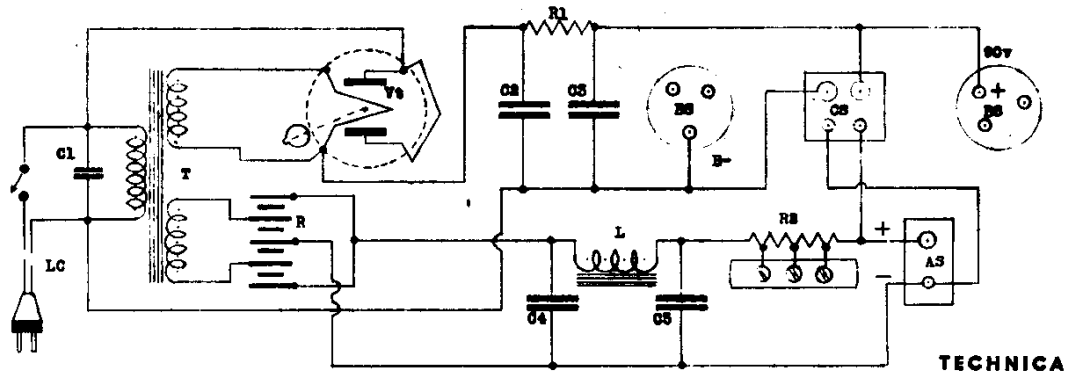

DIAGRAM	DESCRIPTION	PART NO.
LC	Line cord and switch	1501
C1	Condenser .05 mfd 400v	1502
C2, C3	Condenser 20-10 mfd 150v	1514
C4, C5	Condenser 2x1000 mfd 6-3v	1504
R1	Resistor 2500 ohms 1w	1505
R2	Resistor 3.8 ohms tapped	1517
T	Transformer	1506
R	Rectifier	1507
VT	Tube 5Y3 GT	1509
L	Filter choke	1510
A8	"A" socket	1511
BH	Battery plug harness	1518
B8	"B" socket	1513
S	Tube socket	1514
C8	"AB" socket	1515

MODEL "P" COMPACT

Operates any 1.4 volt—4, 5 or 6 tube battery radio from 115 v. 60 cy. source.

Designed for sets using 1A7, 1E4, 1N5G, 1Q5G, etc., tubes to convert battery radio to an efficient AC receiver with low operating cost. Fits in battery compartment of most radios. Ideal for use in home, hotel, camp or any place where normal AC is available.

TECHNICAL DATA

"A" Supply Output
5-6 tubes (average) . 1.4V. @ 275ma
4 tubes . . . . . 1.4V. @ 250ma
4 tubes . . . . . 1.4V. @ 200ma

"B" Supply Output
90 Volts D.C. @ 12 ma. max.

Primary
115 Volts A.C. @ 60 cycles.

Specifications:
Six foot cord and plug—switch in cord.
Size: 2⅜" x 3½" x 6¾".
Weight packed—3½ pounds.

©John F. Rider
Courtesy Nostalgia Air