Emerson Radio & Phonograph Corp.

	Model: 350 AW	Chassis:	Year: Pre March 1934
	Power:	Circuit:	IF:
	Tubes:		
	Bands:		

Resources

Riders Volume 4 - EMERSON 4-2

Courtesy Nostalgia Air

MODEL 30 AW, 33 AW, 250 AW, 321 AW, 350 AW
Schematic, Voltage, Socket

EMERSON RADIO AND PHONOGRAPH CORPORATION

Voltage Readings:

Readings should be taken with Volume Control fully on. Tuning control set for 550 K.C., and antenna outside the set. Use a D.C. Voltmeter having a resistance of 1000 ohms per volt.

Using	300-volt scale Plate to Ground	300-volt scale Screen to Ground	30-volt scale Cathode to Ground
78—Detector Oscillator ..	98	98	1.6
78—I. F. Amplifier.....	98	98	2.8
77—2nd Detector	35	25	1.5
43—Power Amplifier	92	98	..
25Z5—Rectifier	..	..	98

A.C.-D.C. . . 100-135 Volts . . 25-70 Cycles
Also Available for 220 Volts.

Broadcast	Short Wave
540—1500 Kilocycles	1500—3000 Kilocycles
550— 200 Meters	200— 100 Meters

Voltage across speaker field 100 volt.

Bias for 43 tube is measured across filter choke and should be 15 to 18 volts.

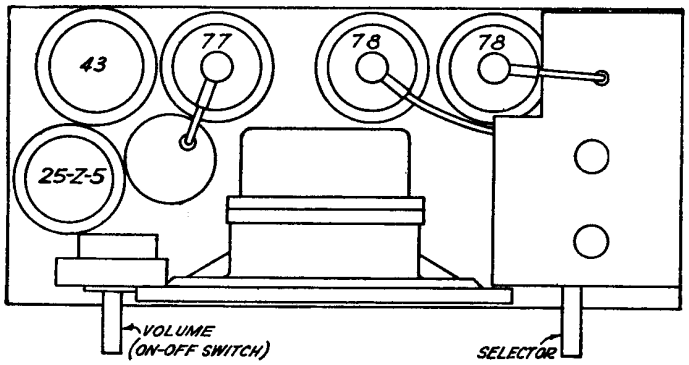

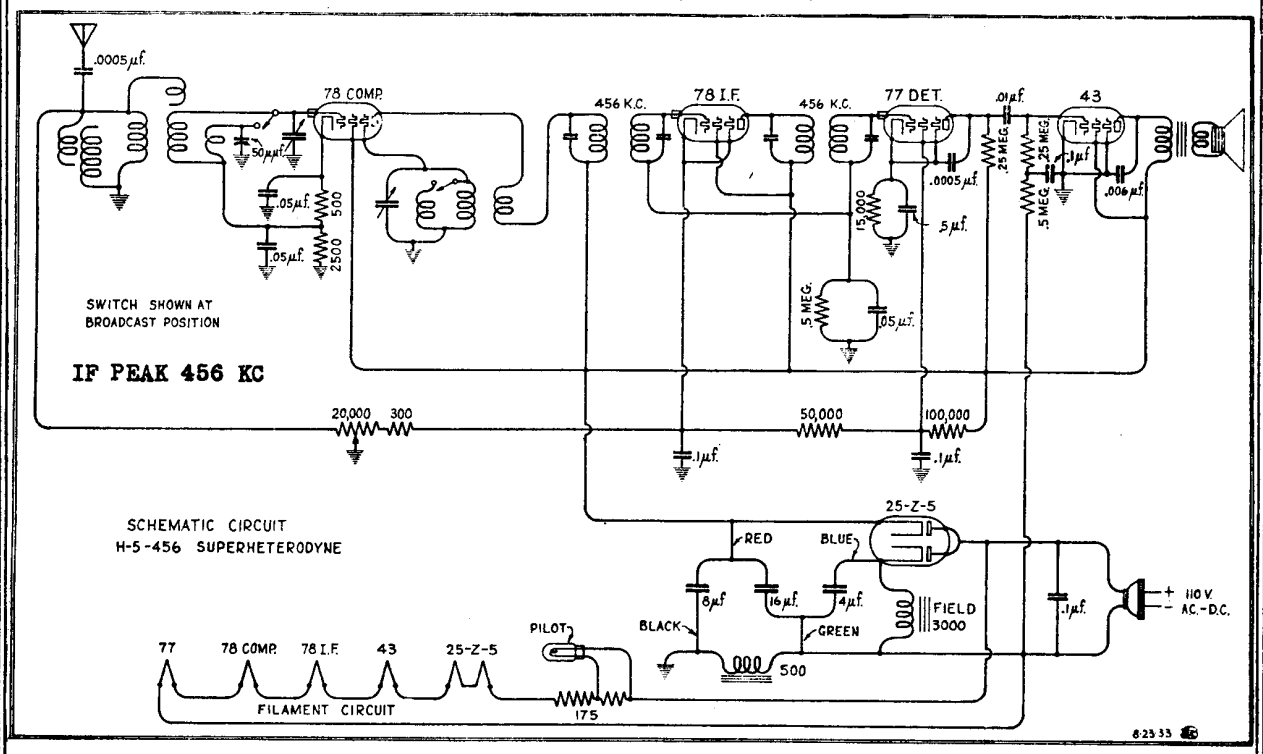

Courtesy Nostalgia Air