U.S. Radio & Television Corp.

	Model: 19	Chassis:	Year: Pre June 1933
	Power:	Circuit:	IF:
	Tubes:		
	Bands:		

Resources
Riders Volume 3 - U S R & T 3-3
Riders Volume 3 - U S R & T 3-4

Courtesy Nostalgia Air

U. S. RADIO & TELEVISION CORP.

MODEL 9 and 19
Class "B"
Chassis 900,902
Schematic

CONNECT A TO A AND B TO B FOR SINGLE SPEAKER.
CONNECT A' TO A, B' TO B, C TO C AND D TO D FOR DUAL SPEAKERS.

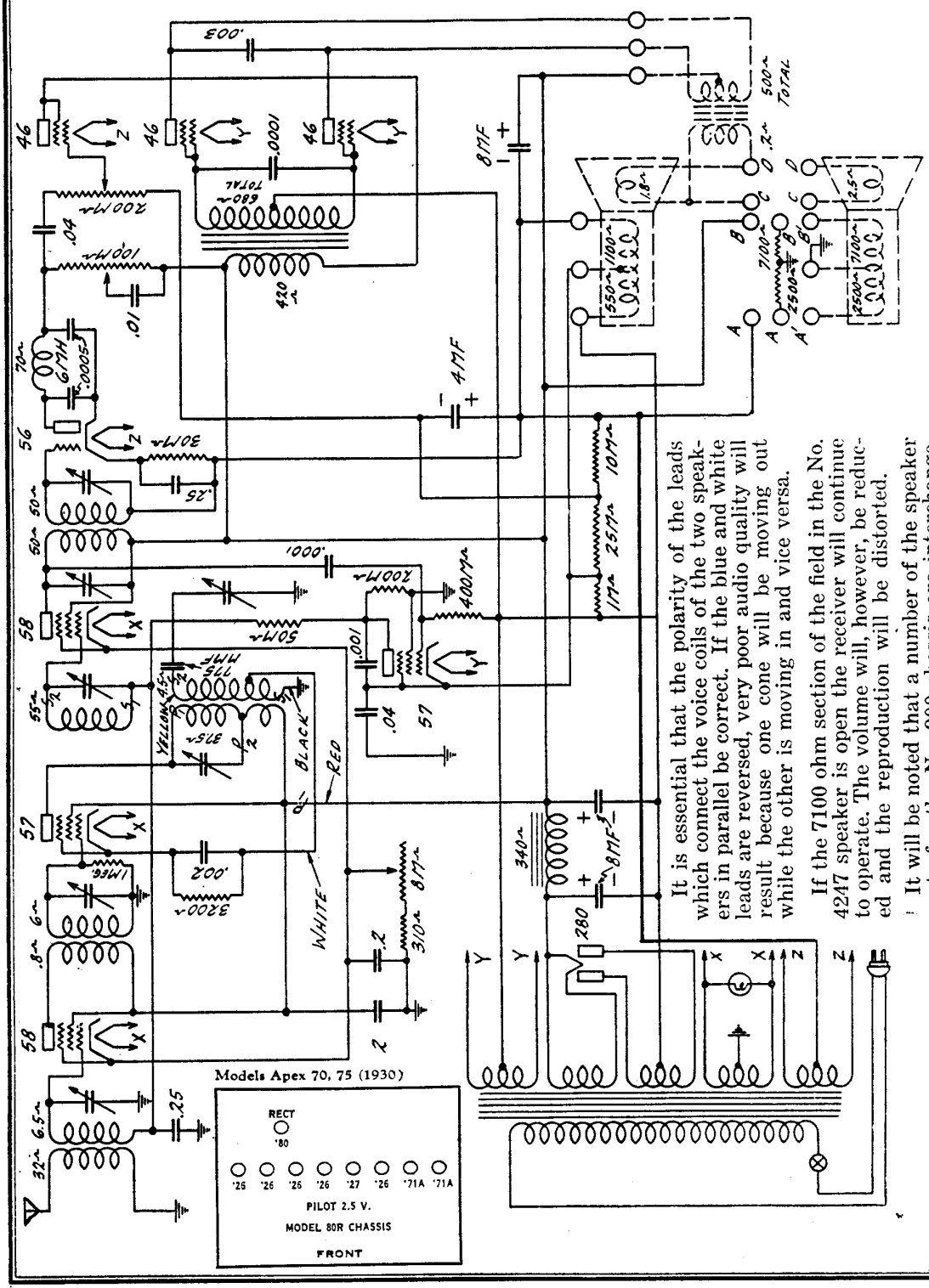

It is essential that the polarity of the leads which connect the voice coils of the two speakers in parallel be correct. If the blue and white leads are reversed, very poor audio quality will result because one cone will be moving out while the other is moving in and vice versa.

If the 7100 ohm section of the field in the No. 4247 speaker is open the receiver will continue to operate. The volume will, however, be reduced and the reproduction will be distorted.

It will be noted that a number of the speaker parts for the No. 900 chassis are interchangeable with parts used in the No. 4246 speaker with the No. 902 chassis. Therefore, it has not been thought necessary to make a repetition of these part numbers in the accompanying list of the changes in parts for the No. 902 chassis.

IF PEAK 262 KC

Courtesy Nostalgia Air

MODEL 9 and 19
Class "B"
Chassis 900,902
Voltage - Data

U. S. RADIO & TELEVISION CORP.

FLUTTERING OR MOTORBOATING

The tube shield and cover must be on, otherwise motorboating may result. Still other causes are open or defective grid circuits or open bypass condensers. Fluttering is very often due to I.F. oscillation and the causes for such a condition should be investigated in line with the information given in the section on "Oscillation."

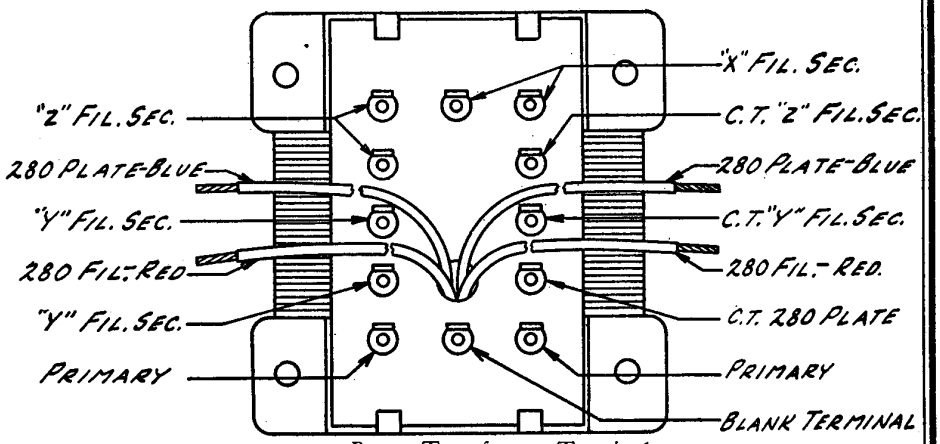

Power Transformer Terminals

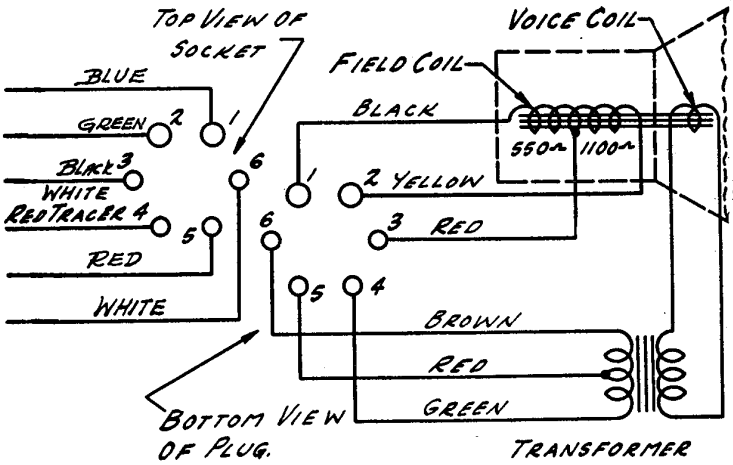

No. 4245 Electrodynamic Speaker and Connections

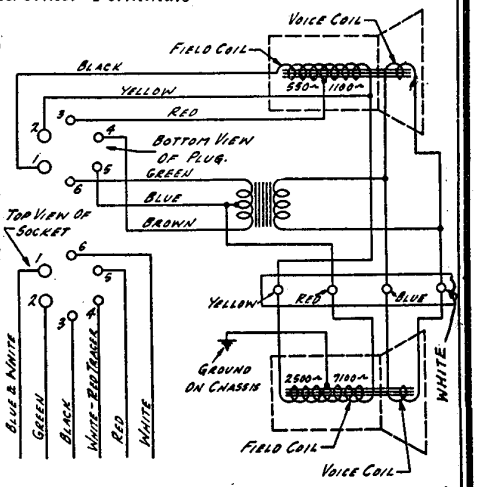

No. 4246 and 4247 Electrodynamic Speakers and Connections

No. 900 and No. 902 CHASSIS—VOLTAGES AT SOCKETS—LINE VOLTAGE 115
VOLUME CONTROL AT MAXIMUM—"Q" CONTROL AT MAXIMUM

Type of Tube	Position of Tube	Function	"A" Volts	"B" Volts	Control Grid "C" Volts	Screen Volts	Screen Current MA	Cathode Volts	Plate MA	Grid Test MA
58	1	R.F.	2.25	125	5.0(1)	125	1.7	5.0	6.0	10.0
57	2	1st Det	2.25	125	5.0(2)	125	.3(2)	5.0(2)	1.2(2)	2.0
58	3	I.F.	2.25	125	5.0(1)	125	1.7	5.0	6.0	10.0
57	4	AVC	2.25	100(3)	24.0(4)	145	0	24.0	0	0
56	5	2nd Det.	2.25	150	12.0			12.0	.4	.5
46	6	Driver	2.25	215	19.0(5)				25.0	30.0
46	7	Power	2.25	320					5.0(6)	13.0
46	8	Power	2.25	320					5.0(6)	13.0
280	9	Rect.	4.8						41 Per Plate	

(1) Measured from movable arm of "Q" control to ground. Reads 26 volts with "Q" control at minimum.
(2) Values read with analyzer plug in socket. Actual values different as analyzer prevents oscillator from oscillating.
(3) Measured with 600,000 Ohm Meter.
(4) Measured across 1000 Ohm Resistor.
(5) Measured across 10,000 Ohm Carbon Voltage Divider Resistor.
(6) Plate current at no signal. At full output plate current is 60 to 70 MA.

Courtesy Nostalgia Air