General Electric Co.

	Model: JE530	Chassis:	Year: Pre April 1941
	Power:	Circuit:	IF:
	Tubes:		
	Bands:		

Resources

Riders Volume 12 - GE 12-65

Courtesy Nostalgia Air

GENERAL ELECTRIC CO.

MODELS JE-530, JE-531, JE-531X

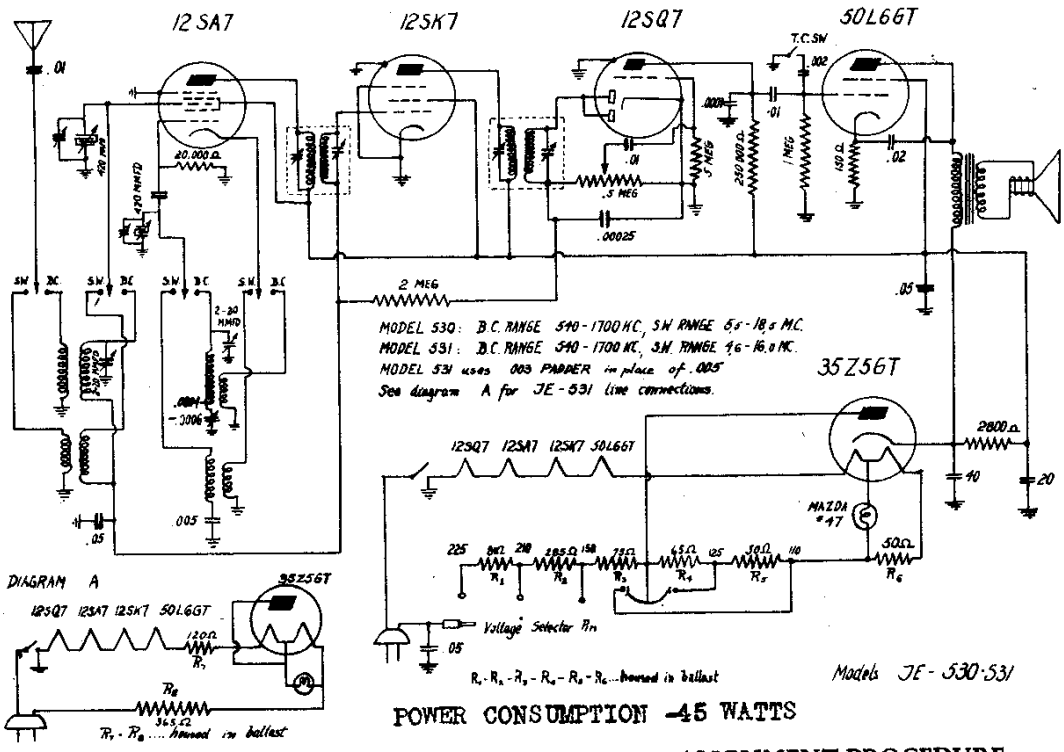

POWER CONSUMPTION -45 WATTS

-1940-

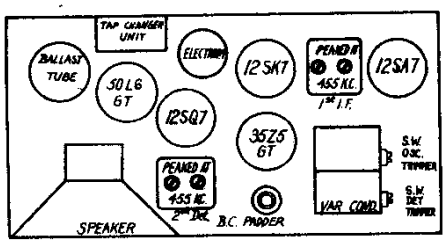

Electrical Power Output

Undistorted.....1.2 watts
Maximum.....2 watts

Loud-speaker—Permanent Magnet

Outside Cone Diameter.....5 inches
Voice Coil Impedance (400 cycles).....3.5 ohms

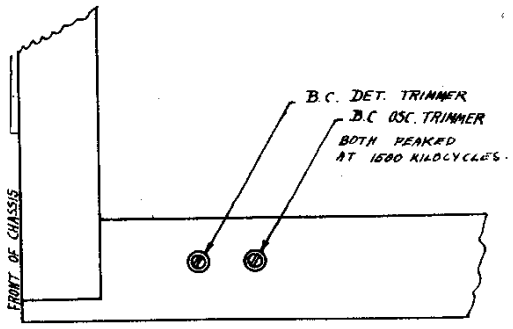

TRIMMER LOCATION

ALIGNMENT PROCEDURE

Alignment Frequencies

I.F.....455 Kc.
Broadcast R.F.....1500 and 600 Kc.
Short Wave
JE530.....17,000 Kc.
JE531X.....15,000 Kc.

I.F. Alignment

Connect an output meter across the voice coil. Turn the volume control to maximum. Set test oscillator to 455 Kc. and keep the oscillator output as low as a readable meter reading will permit.

Apply signal to the grid of the 12SK7 through a .05 mfd. capacitor and align the 2nd I.F. transformer. Repeat the procedure applying the 455 Kc. signal to the control grid of the 12SA7 and aligning the 1st I.F. transformer. Do not remove the grid leads from the tubes. Finish alignment by over-all adjustments.

R.F. Alignment

Refer Sketch **"Trimmer Location."** Apply R.F. signals through a standard IRE dummy to the antenna terminal.

"C" Band (Model JE530—5500-18,500 Kc.)

Rotate band switch to clockwise position and set dial pointer and signal generator to 17 megacycles. Align by rotating S.W. osc. trimmer located on rear section of variable condenser. Peak the S.W. detector trimmer located on front section of variable condenser for maximum signal while rocking the gang condenser. The image of 17 Mc. should be heard at 16.09 Mc.

"C" Band (Models JE531, JE531X—4600-16,000 Kc.)

Same procedure as above, but align osc. trimmer at 15 megacycles. Image will be heard at 14.09 Mc.

"B" Band (All models—540-1700 Kc.)

Rotate band switch to counterclockwise position and set dial pointer and signal generator to 1500 Kc. Align by turning the broadcast oscillator trimmer screw. Peak broadcast detector screw for maximum signal. Set screw for maximum signal. Set receiver dial and signal generator to 600 Kc. and adjust the broadcast padder for maximum signal while rocking the gang condenser. Retrim at 1500 Kc.

©John F. Rider, Publisher

Courtesy Nostalgia Air